High Misalignment

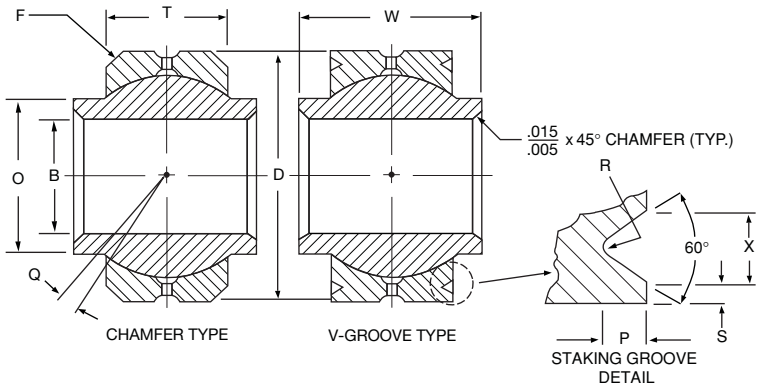

NHBB P/N

ASBY 3 V SS A X 123

- 123: Dry-film Lubrication
  - -1 Film on Spherical Surface of Race
  - -2 Film on Bore of Ball
  - -3 Film on Spherical Surface of Ball
- X: .0005 Maximum Radial Clearance
- A: Letter "A" Indicates Lube Groove and Lube Holes in Ball
- SS: Material Code
- V: Staking Groove
- 3: Bore Diameter in multiples of 1/16 inch
- ASBY: High Misalignment Series

Part Number V-Grooved*	(B) Bore Diameter	(D) Outside Diameter	(W) Ball Width	(T) Race Width	(O) Shoulder Diameter	Ball Diameter	(F) Race Chamfered x 45°	(Q) Mis-alignment	(P)	(R) Staking Groove Data	(S) Staking Groove Data	(X) Staking Groove Data	Limit Static Radial Load Bronze Race	Limit Static Radial Load Steel Race	Weight
	Inch	Inch	Inch	Inch	Inch	Inch	Inch	Ref.	Inch	Inch	Inch	Inch	lbs.	lbs.	lbs.
	+.0000	+.0000	+.000	+.010	Ref.	Ref.	+.000		+.000	+.000	+.000	+.000			Ref.
	-.0005	-.0005	-.005	-.000			-.010		-.015	-.010	-.010	-.010			
ASBY3V	.1900	.5625	.500	.205	.319	.437	.020	15°	.030	.015	.020	.045	2470	4060**	.018
ASBY4V	.2500	.7400	.593	.250	.390	.593	.022	24°	.030	.015	.020	.045	4680	7040**	.036
ASBY5V	.3125	.6875	.625	.250	.418	.593	.022	20°	.030	.015	.020	.045	4680	8430	.029
ASBY6V	.3750	.9060	.813	.340	.512	.781	.032	23°	.030	.015	.020	.045	9060	15860**	.068
ASBY7V	.4375	1.0000	.875	.340	.618	.875	.032	22°	.030	.015	.020	.045	10150	18270	.095
ASBY8V	.5000	1.1250	.937	.396	.730	1.000	.032	20°	.040	.020	.030	.055	14400	25920	.159
ASBY10V	.6250	1.3750	1.200	.562	.856	1.250	.032	20°	.040	.020	.030	.055	27440	49390	.245
ASBY12V	.7500	1.5625	1.280	.615	.970	1.375	.044	18°	.040	.020	.030	.055	33820	60880	.315
ASBY14V	.8750	1.7500	1.400	.620	1.140	1.531	.044	18°	.060	.020	.030	.080	36510	65720	.430
ASBY16V	1.0000	2.1250	1.875	.830	1.278	1.875	.044	21°	.060	.020	.030	.080	64410	115930	.831
ASBY18V	1.1250***	2.3125***	1.875	.937	1.400	2.062	.044	20°	.060	.020	.030	.080	78560	141410	1.096
ASBY20V	1.2500***	2.5000***	1.875	1.000	1.523	2.250	.044	21°	.060	.020	.030	.080	92810	167060	1.318
ASBY22V	1.3750***	2.7500***	2.125	1.093	1.670	2.500	.044	22°	.060	.020	.030	.080	91800	206550	1.800
ASBY24V	1.5000***	3.0000***	2.250	1.170	1.800	2.672	.044	21°	.060	.020	.030	.080	106340	239280	2.223

* For chamfered version, delete 'V' from part number.
** Based on pin limitation.
*** Bore and O.D. tolerance: +.0000-.0008.

Notes:

- Radial Clearance: Free running to .002 max.
- Dimensions: All dimensions apply after plating.
- Options: For bearings without lubrication holes and grooves, add suffix "300" to part number (Example: ASBY5-300, ASBY16VCR300).
- Groove dimensions on ID of race and grease holes through race are before bearing assembly, but swaging shall not restrict grease flow.

Materials

Part No.	Ball	Race
Catalog No.	52100 Alloy Steel, Chrome Plated†	Aluminum Bronze (AMPCO® 15), Cadmium Plated†
Catalog No. + S	"	4130 Alloy Steel, Cadmium Plated†
Catalog No. + SS	"	CRES 17-4PH
Catalog No. + CR	CRES 440C	"
Catalog No. + CRP	CRES 440C, Chrome Plated†	"

†Plating: When specified in materials block, ball spherical diameter and ends are hard chrome plated per AMS-QQ-C-320, CL. 2 (.0002 to .0005 inch thickness). All external surfaces of race are cadmium plated per AMS-QQ-P-416.

AMPCO® is a registered trademark of AMPCO Metal, Inc.